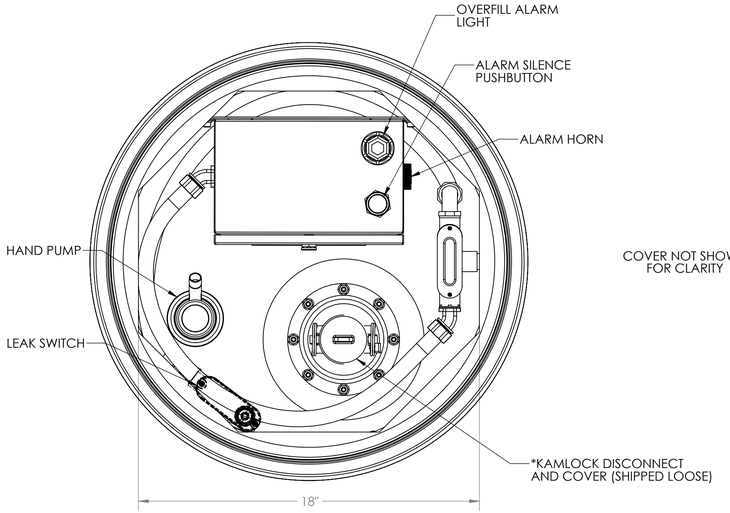

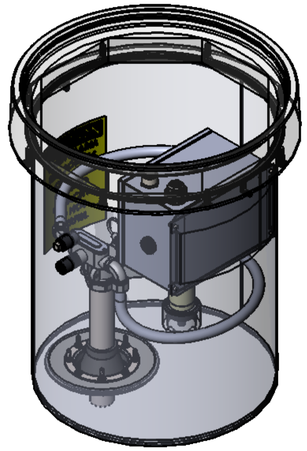

COVER NOT SHOWN FOR CLARITY

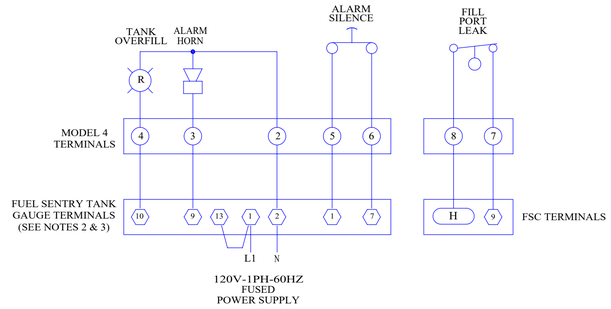

MODEL 4 TO FUEL SENTRY WIRING DIAGRAM

ITEM NO.	QTY.	DESCRIPTION
1	1	TYPE 4 SPILL CONTAINER ASSEMBLY
2	1	HAND PUMP
3	1	FLEXIBLE ENTRY BOOT
4	1	CAUTION LABEL - FLUORESCENT ORANGE
5	1	LEAK DETECTOR SWITCH - MODEL "P-LDS"
6	1	ELECTRONICS BOX WITH ALARM HORN, ALARM SILENCE PUSHBUTTON, AND ALARM LIGHT
7*	1	KAMLOK ADAPTOR (SHIPPED LOOSE)
8*	1	DUST COVER FOR ITEM #7 (SHIPPED LOOSE)
9	1	TYPE 4 COMPOSITE COVER
10	1	COVER O-RING

NOTES:

1. LOCATIONS OF COMPONENTS MAY BE MODIFIED TO SUIT EQUIP. DIMENSIONS OR ARRG'T.
2. OVERFILL ALARM LIGHT, HORN, AND SILENCING BUTTON ARE DESIGNED TO BE USED WITH A PREFERRED UTILITIES TANK GAUGE. IF TANK GAUGE IS MOUNTED IN PUMP SET CONTROL CABINET, REFER TO CABINET WIRING DIAGRAM.
3. IF THE TANK GAUGE IS A STAND ALONE FUEL SENTRY TANK GAUGE (COMPLETELY FIELD PROGRAMMABLE) REFER TO FUEL SENTRY MANUAL AND RECOMMENDED SET UP WIRING DIAGRAM FOR ASSITANCE IN SETTING UP.
4. *ITEMS #7 & 8 NOT SUPPLIED WITH "-ND" MODELS.

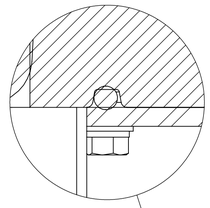

SCALE 1 : 1

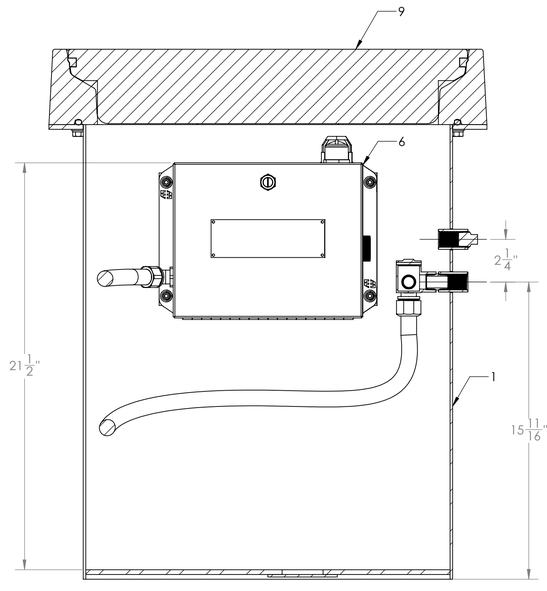

SECTION B-B

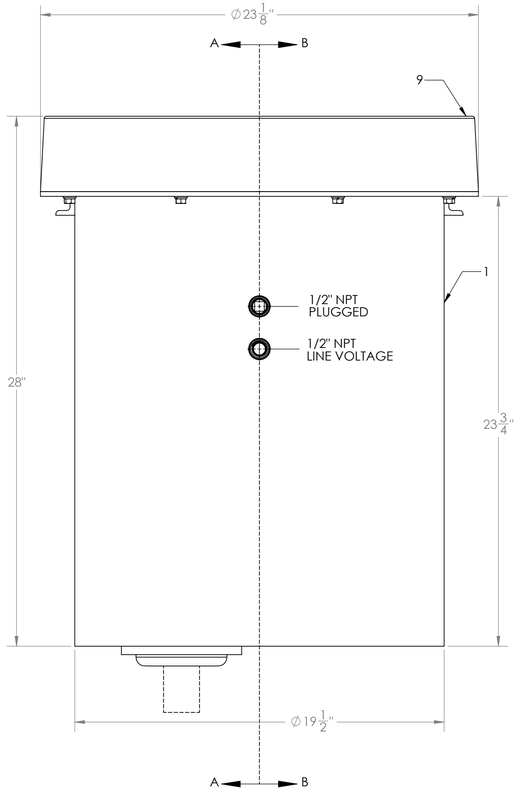

FRONT VIEW

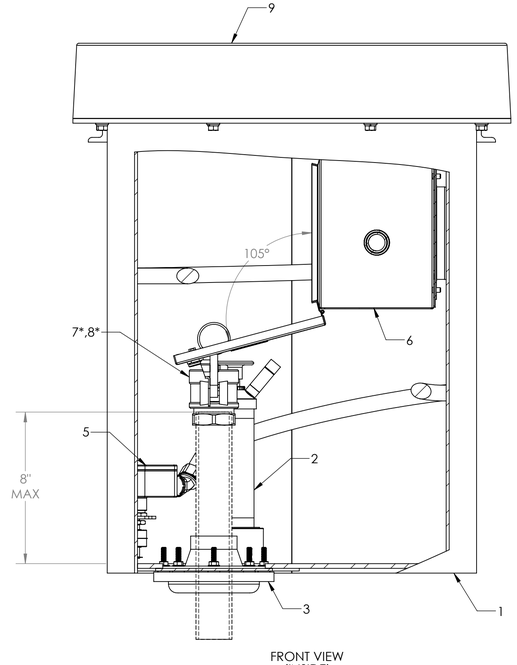

FRONT VIEW (INSIDE)

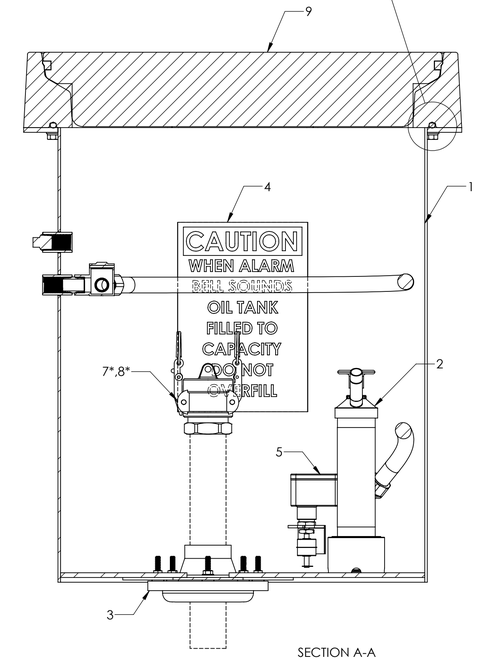

SECTION A-A

TOLERANCE UNLESS OTHERWISE SPECIFIED:				NAME	DATE
PLATE WORK:		MACHINING:			
CUTTING ASSEMBLY	±0.063	0.000 - 3.000	±0.016	DRAWN	JAH	8/18/22
0"-36"	±0.063	3.001 - 24.00	±0.031	CHECKED		
36" and UP	±0.125	24.00 & UP	±0.063	ENG APPR.		
ANGLES	±2°30"	ANGLES	±1°00'	MFG APPR.		
HOLE DIA'S.		HOLE DIA'S.		Q.A.		
0.000 - 0.250	+0.006 -0.003	0.000 - 0.250	+0.003 -0.002			
0.251 - 0.500	+0.008 -0.002	0.251 - 0.500	+0.008 -0.002			
0.501 & UP	+0.010 -0.003	0.501 & UP	+0.010 -0.003			
		FINISH	125 RMS			

BREAK ALL SHARP EDGES.

PROPRIETARY AND CONFIDENTIAL

THE INFORMATION CONTAINED IN THIS DRAWING IS THE SOLE PROPERTY OF PREFERRED UTILITIES MFG. CORP. ANY REPRODUCTION IN PART OR AS A WHOLE WITHOUT THE WRITTEN PERMISSION OF PREFERRED UTILITIES MFG. CORP. IS PROHIBITED.

Preferred Utilities Mfg. Corp.
31-35 South St., Danbury CT 06810 USA

TITLE:

MODEL 4 SIDEWALK SPILL CONTAINER W/O DIGITAL READOUT

SIZE	DWG. NO.	REV
D	4-3-X	
SCALE: 1:4	WEIGHT: 150 LBS	SHEET 1 OF 1

REV
4-3-1.5
D

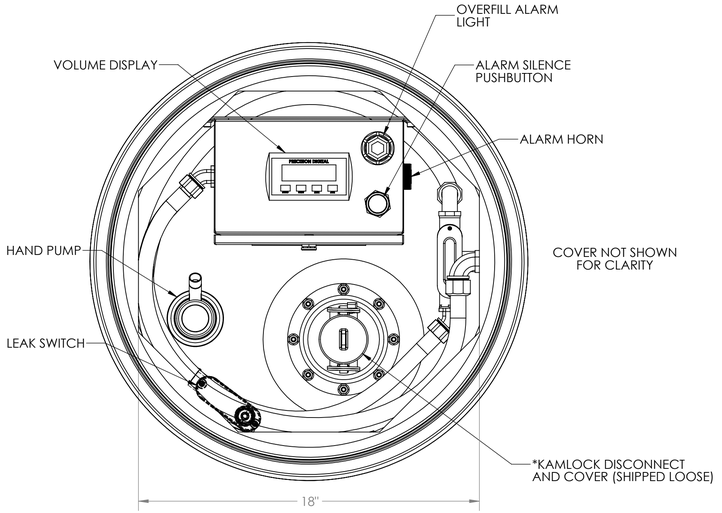

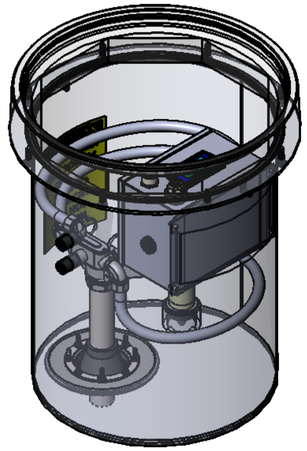

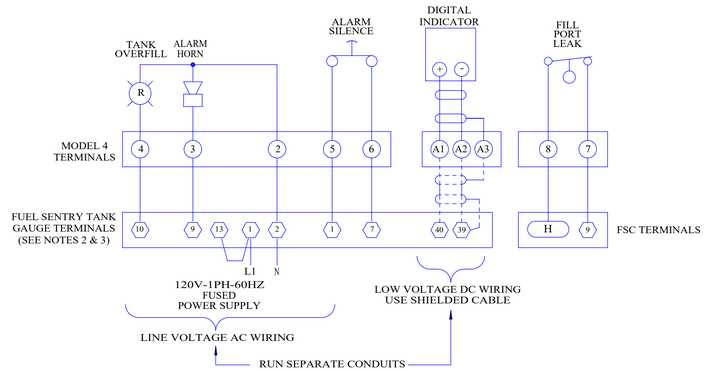

MODEL 4 TO FUEL SENTRY WIRING DIAGRAM

ITEM NO.	QTY.	DESCRIPTION
1	1	TYPE 4 SPILL CONTAINER ASSEMBLY
2	1	HAND PUMP
3	1	FLEXIBLE ENTRY BOOT
4	1	CAUTION LABEL - FLUORESCENT ORANGE
5	1	LEAK DETECTOR SWITCH - MODEL "P-LDS"
6	1	ELECTRONICS BOX WITH ALARM HORN, ALARM SILENCE PUSHBUTTON, ALARM LIGHT, AND DIGITAL DISPLAY
7*	1	KAMLOK ADAPTOR (SHIPPED LOOSE)
8*	1	DUST COVER FOR ITEM #7 (SHIPPED LOOSE)
9	1	TYPE 4 COMPOSITE COVER
10	1	COVER O-RING

NOTES:

1. LOCATIONS OF COMPONENTS MAY BE MODIFIED TO SUIT EQUIP. DIMENSIONS OR ARRGT.
2. OVERFILL ALARM LIGHT, HORN, AND SILENCING BUTTON, AND DISPLAY ARE DESIGNED TO BE USED WITH A PREFERRED UTILITIES TANK GAUGE. IF TANK GAUGE IS MOUNTED IN PUMP SET CONTROL CABINET, REFER TO CABINET WIRING DIAGRAM.
3. IF THE TANK GAUGE IS A STAND ALONE FUEL SENTRY TANK GAUGE (COMPLETELY FIELD PROGRAMMABLE) REFER TO FUEL SENTRY MANUAL AND RECOMMENDED SET UP WIRING DIAGRAM FOR ASSITANCE IN SETTING UP.
4. *ITEMS #7 & 8 NOT SUPPLIED WITH "-ND" MODELS.

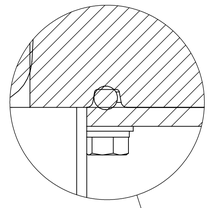

SCALE 1 : 1

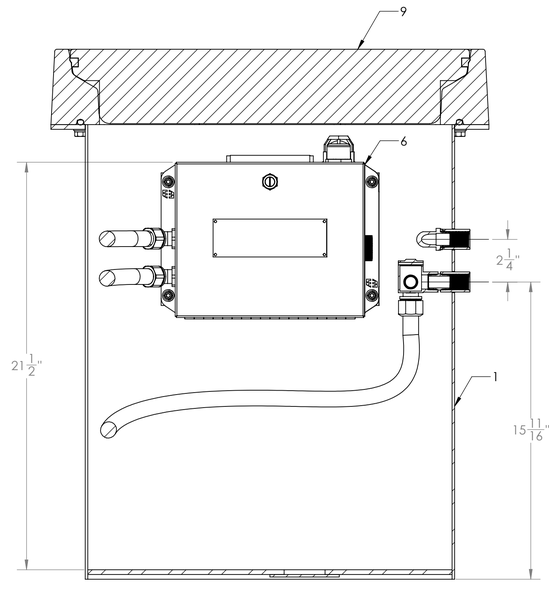

SECTION B-B

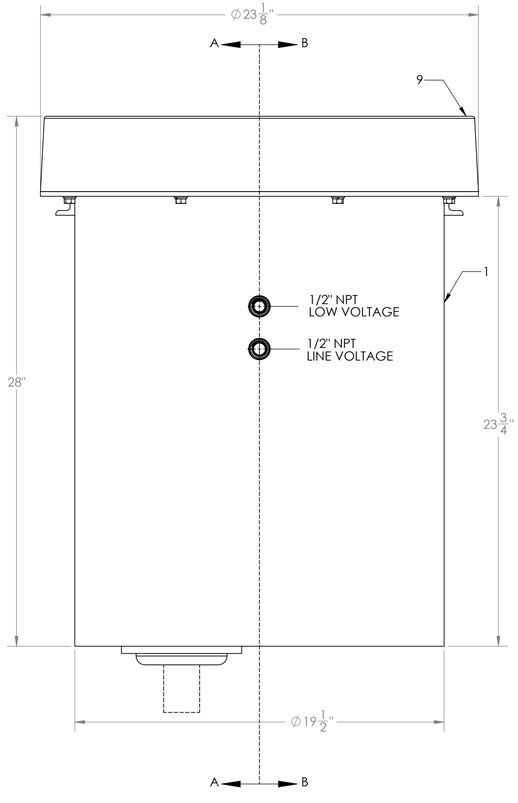

FRONT VIEW

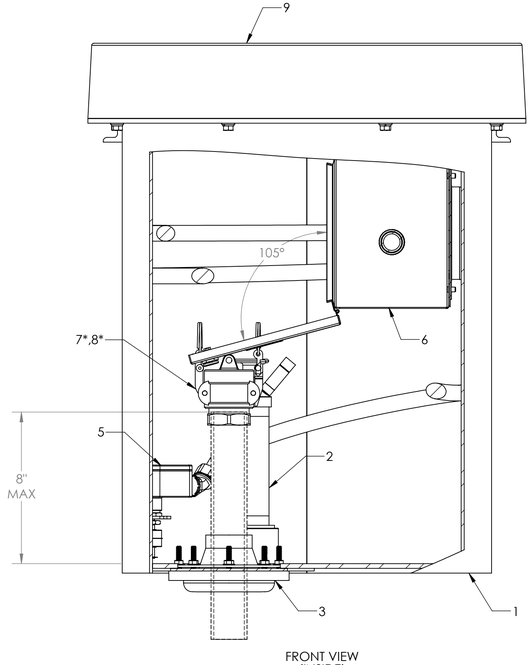

FRONT VIEW (INSIDE)

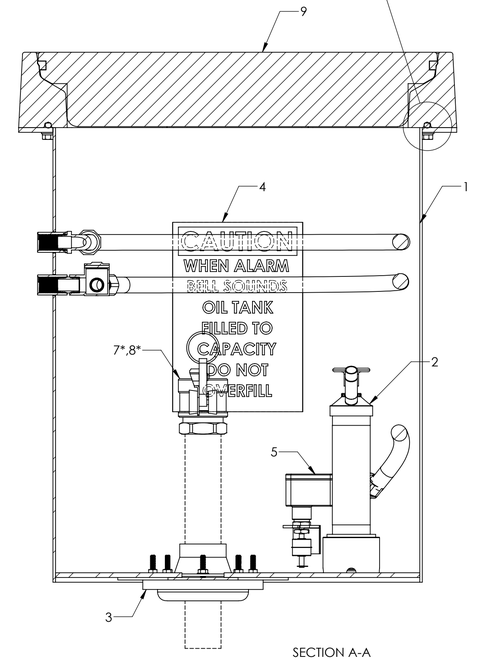

SECTION A-A

TOLERANCE UNLESS OTHERWISE SPECIFIED:				NAME	DATE
PLATE WORK:		MACHINING:	DRAWN	JAH	8/18/22
CUTTING	±0.063	0.000 - 3.000	±0.016		
ASSEMBLY		3.001 - 24.00	±0.031	CHECKED	
0"-36"	±0.063	24.00 & UP	±0.063	ENG APPR.	
36" and UP	±0.125	ANGLES	±1°00'		
ANGLES	±2°30'	HOLE DIA'S.		MFG APPR.	
HOLE DIA'S.		0.000 - 0.250	+0.003 -0.002	Q.A.	
0.000 - 0.250	+0.006 -0.003	0.251 - 0.500	+0.008 -0.002		
0.251 - 0.500	+0.008 -0.002	0.501 & UP	+0.010 -0.003		
0.501 & UP	+0.010 -0.003	FINISH	125 RMS		

BREAK ALL SHARP EDGES.

PROPRIETARY AND CONFIDENTIAL

THE INFORMATION CONTAINED IN THIS DRAWING IS THE SOLE PROPERTY OF PREFERRED UTILITIES MFG. CORP. ANY REPRODUCTION IN PART OR AS A WHOLE WITHOUT THE WRITTEN PERMISSION OF PREFERRED UTILITIES MFG. CORP. IS PROHIBITED.

Preferred Utilities Mfg. Corp.
31-35 South St., Danbury CT 06810 USA

TITLE:

MODEL 4 SIDEWALK SPILL CONTAINER W/ DIGITAL READOUT

SIZE	DWG. NO.	REV
D	4-4-X	

SCALE: 1:4 | WEIGHT: | SHEET 1 OF 1

REV 4-4-1.5 D